REVISIONS				
ECN	REV	DESCRIPTION	DATE	APPROVED
N/A	B	GENERAL REVISION	10/07/2022	STEVE JANKO

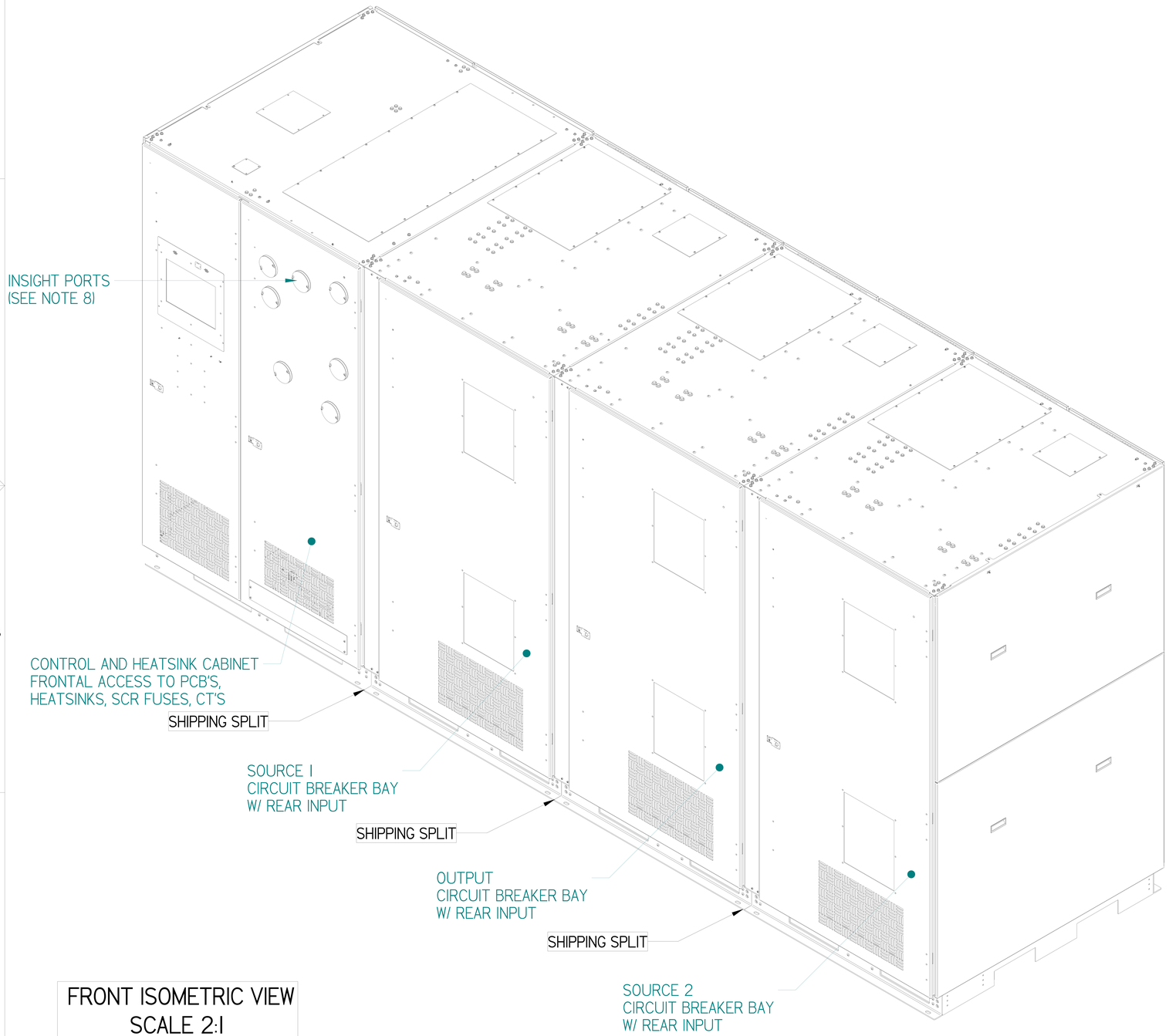

FRONT ISOMETRIC VIEW
SCALE 2:1

Notes:

1. Front / Rear access only required for operation and servicing of Series 70 eSTS. Top or Bottom Access is available.

2. The Series 70 eSTS is mounted on split common frame with all internal connections factory provided. There are (3) shipping splits. Floor is to be level to 0.125 : 48in. all directions.

3. The interconnection between the cabinets will be field installed with all hardware pre-tested and supplied.

4. The Circuit Breakers are integral to the cabinets and ship with the units.

5. The unit is provided with both frontal and side forklift provision as shown for maneuvering.

6. For the 2 Source Series 70 eSTS, with a 277/480V / 3000A / 60Hz / SMR / 4-wire configuration:
see Sht 3 for Bottom Cable Access Areas / Sht 4 for Top Cable Access Areas and recommended wire size (Table 1)
see Sht 6 for Cable Landing locations

7. Optional 40kA/Phase Surge Protective Devices with monitoring and internal alarms are supplied per source.

8. Optional External LayerZero InSight Ports are provided to allow for thermal scanning of internal connections.

9. Optional Drip Shield available on request.

10. See One-Line electrical diagram for further detail.

11. Option: Custom bus adaptation from the Input and Output bus to bus ducting is available on demand if cable connection is not used. Please specify bus duct in use at the time of order.

Copyright © 2022, LayerZero Power Systems, Inc.

UNLESS OTHERWISE SPECIFIED
DIMENSIONS ARE IN INCHES
DIMENSIONS IN [ ] ARE IN MILLIMETERS
DO NOT SCALE DRAWING

TOLERANCES:
.XX ± .03
.XXX ± .010
ANGULAR ± .1/2

FIRST ANGLE PROJ.

OUTLINE, MOUNTING, INSTALLATION DIAGRAM
3000A, 277-480V, 3-Phase, 4-Wire, 60Hz, SMR,
2 Source
Series 70 eSTS

DWN	SPJ	DATE	01/17/22	SIZE	FSCM NO.	DWG NO.	REV
CHK	NEM	DATE	01/17/22	D		55-11-40895001	B
APVD	SPJ	DATE	01/17/22	SCALE 1 = 4	94-MS-40895001SHT1	SHEET 1 OF 6	

REVISIONS				
ECN	REV	DESCRIPTION	DATE	APPROVED
N/A	B	GENERAL REVISION	10/07/2022	STEVE JANKO

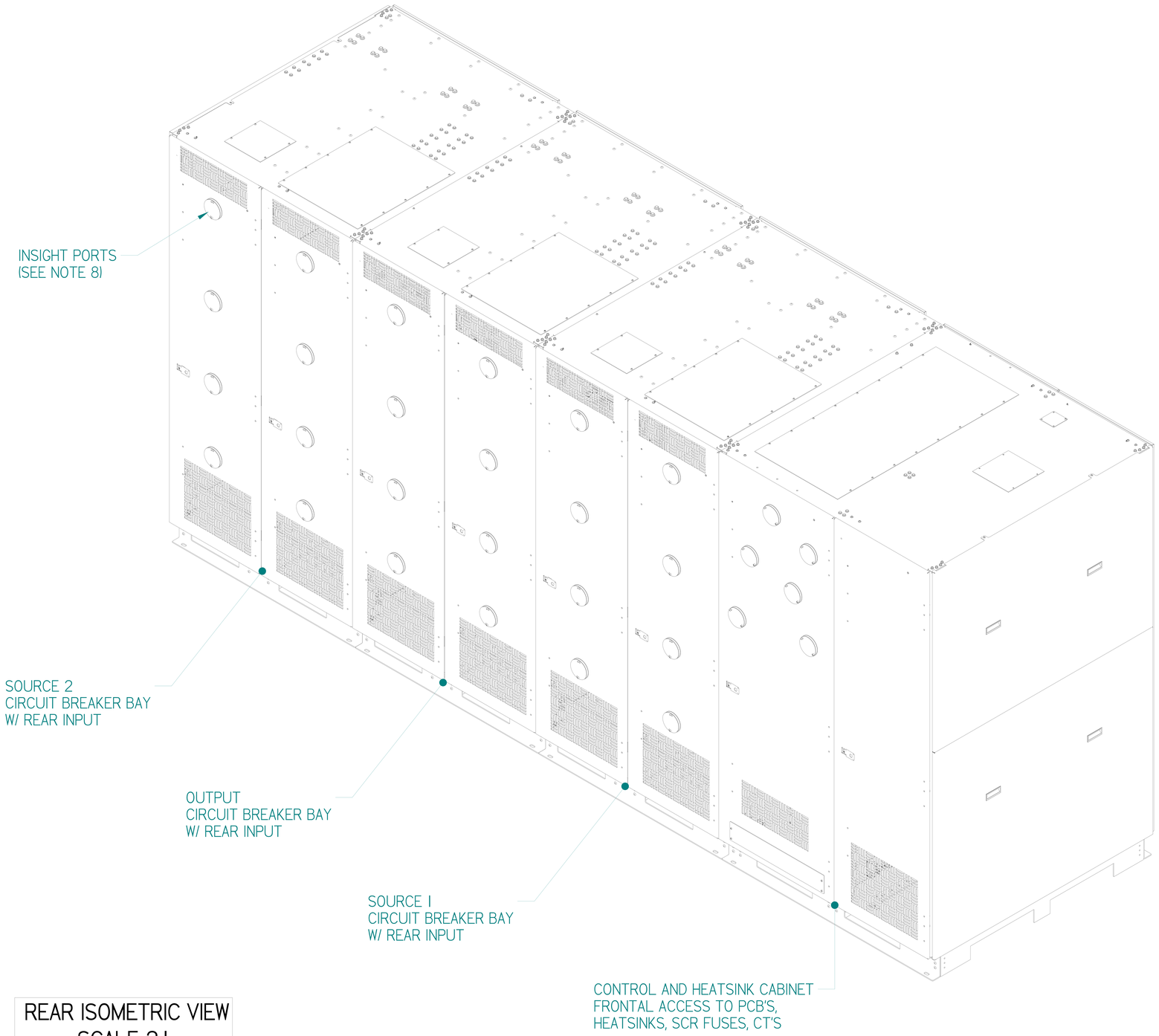

REAR ISOMETRIC VIEW
SCALE 2:1

Copyright © 2022, LayerZero Power Systems, Inc.

UNLESS OTHERWISE SPECIFIED
DIMENSIONS ARE IN INCHES
DIMENSIONS IN [ ] ARE IN MILLIMETERS
DO NOT SCALE DRAWING

TOLERANCES:
.XX ± .03
.XXX ± .010
ANGULAR ± .1/2

FIRST ANGLE PROJ.

OUTLINE, MOUNTING, INSTALLATION DIAGRAM
3000A, 277-480V, 3-Phase, 4-Wire, 60Hz, SMR,
2 Source
Series 70 eSTS

DWN	SPJ	DATE	01/17/22	SIZE D	FSCM NO.	DWG NO. 55-11-40895001	REV B
CHK	NEM	DATE	01/17/22				
APVD	SPJ	DATE	01/17/22	SCALE 1 = 4	94-MS-40895001SHT2	SHEET 2 OF 6	

REVISIONS				
ECN	REV	DESCRIPTION	DATE	APPROVED
N/A	B	GENERAL REVISION	10/07/2022	STEVE JANKO

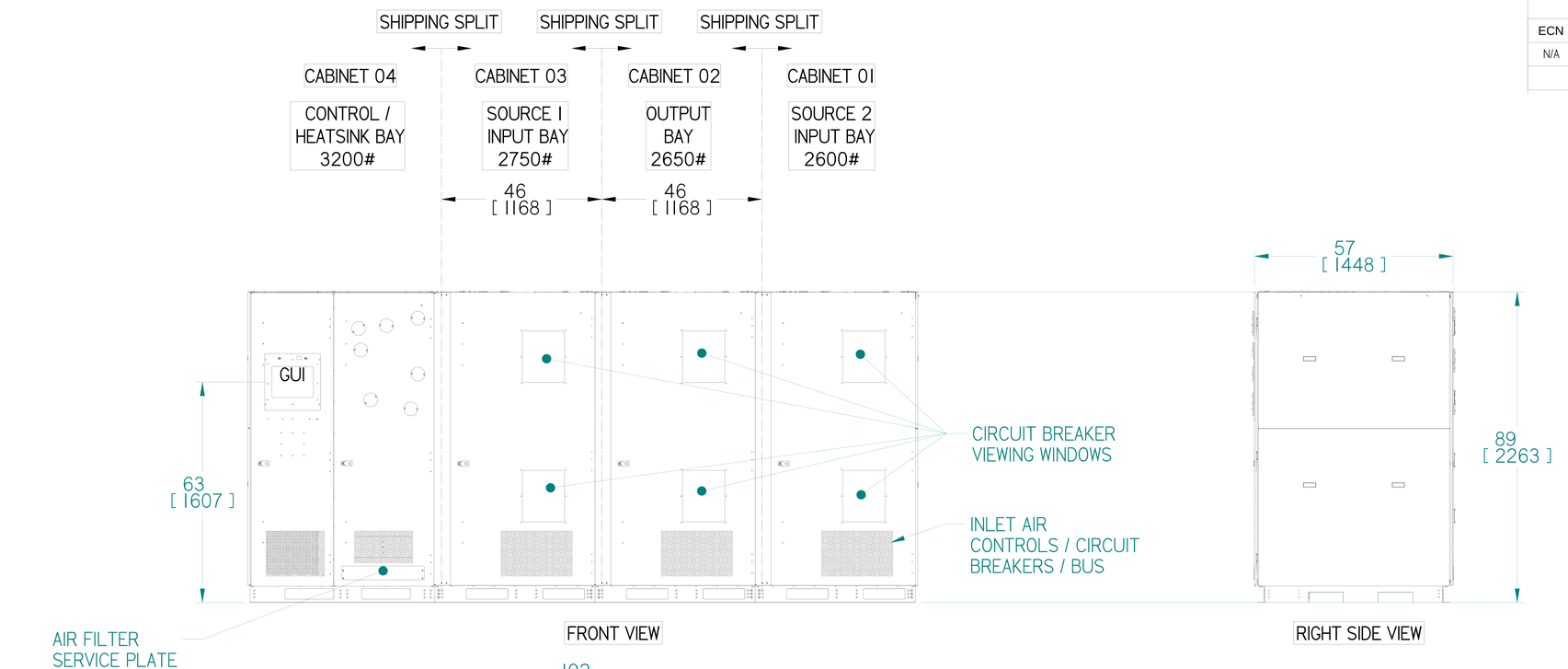

RECOMMENDED MINIMUM CLEARANCES:
FRONT: 42 IN. [1067]
REAR: 42 IN. [1067]
SIDES: 4 IN. [101]
TOP: 18IN. [457]

GROSS WEIGHT:
11,200# [5080kg]

WARNING: DO NOT COVER FORKLIFT SLOTS IN BASE AS THIS IS THE PATH FOR INCOMING HEATSINK CABINET COOLING AIR

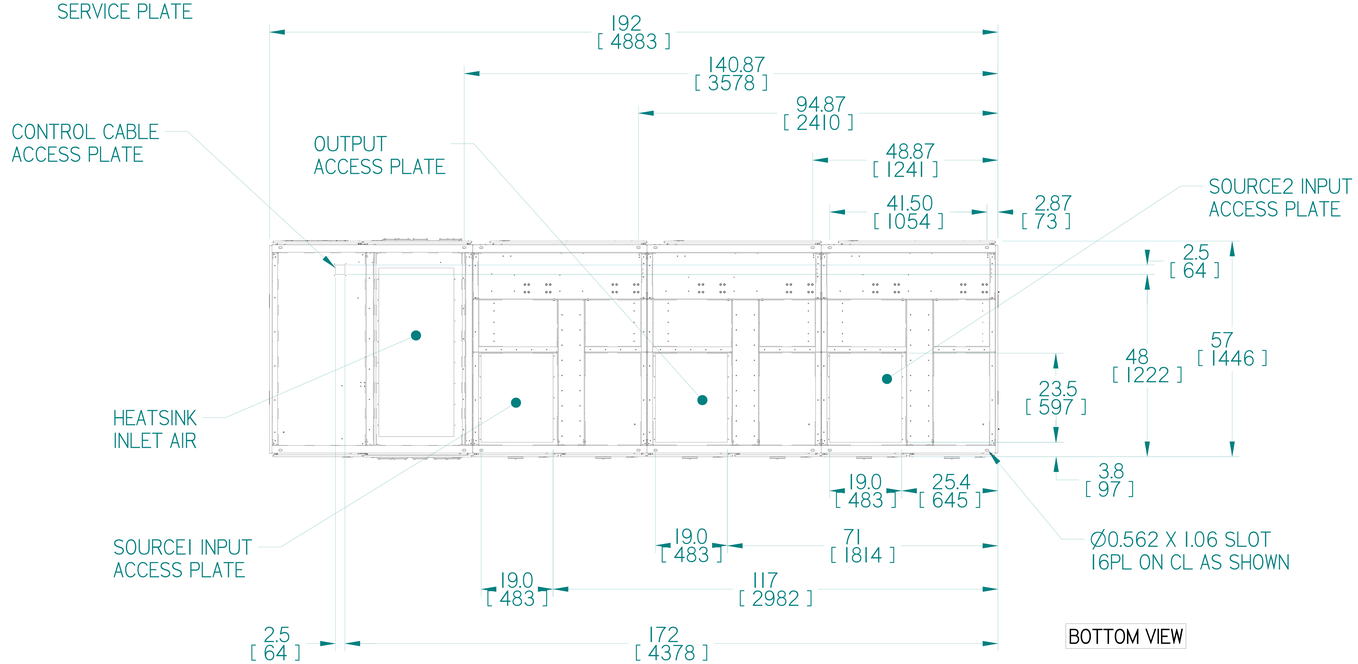

TABLE 1		
Compression Lugs and associated hardware for incoming load cables provided by others		
DESCRIPTION	CABLE SIZE AND LUGS	
	INPUT/ OUTPUT	COMPRESSION LUG (75 DEG C WIRE MIN)
SOURCE INPUT / OUTPUT (4000A)	(12) 750 KCMIL (MAX)	BUS LANDING: FOR NEMA 2-HOLE (1/2DIA), 1-3/4 INCH SPACING
GND	500MCM MIN	COMPRESSION TYPE LUG (750 KCMIL MAX)
CONTROL WIRE	#16GA	

Copyright © 2018, LayerZero Power Systems, Inc.

UNLESS OTHERWISE SPECIFIED
DIMENSIONS ARE IN INCHES
DIMENSIONS IN [ ] ARE IN MILLIMETERS
DO NOT SCALE DRAWING

TOLERANCES:
.XX ± .03
.XXX ± .010
ANGULAR ± .1/2

FIRST ANGLE PROJ.

OUTLINE, MOUNTING, INSTALLATION DIAGRAM
3000A, 277-480V, 3-Phase, 4-Wire, 60Hz, SMR,
2 Source
Series 70 eSTS

DWN	SPJ	DATE	01/17/22	SIZE D	FSCM NO.	DWG NO. 55-11-40895001	REV B
CHK	NEM	DATE	01/17/22				
APVD	SPJ	DATE	01/17/22	SCALE 1 = 4	94-MS-40895001SHT3	SHEET 3 OF 6	

REVISIONS				
ECN	REV	DESCRIPTION	DATE	APPROVED
N/A	B	GENERAL REVISION	10/07/2022	STEVE JANKO

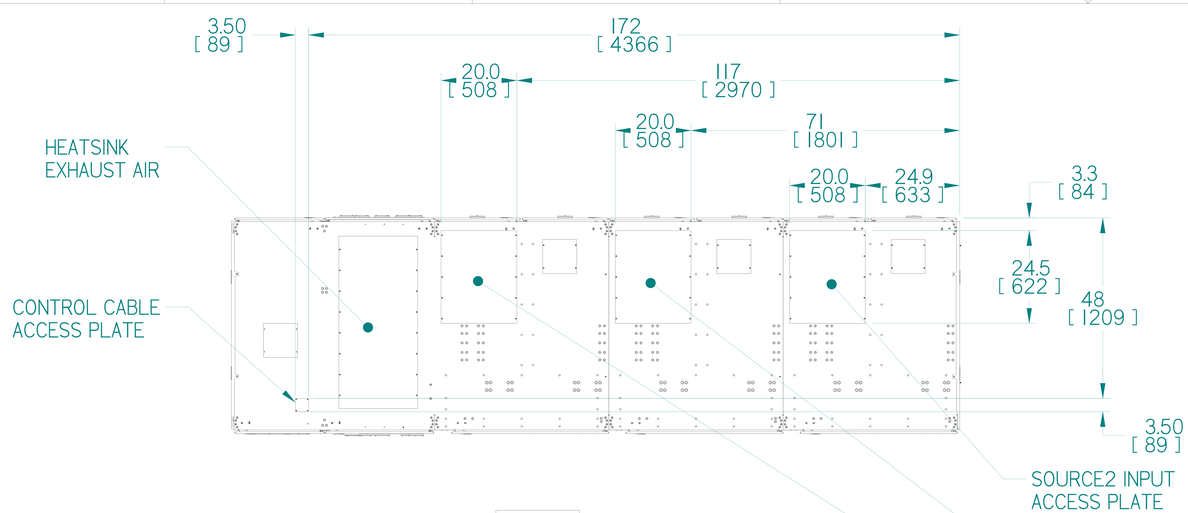

TOP VIEW

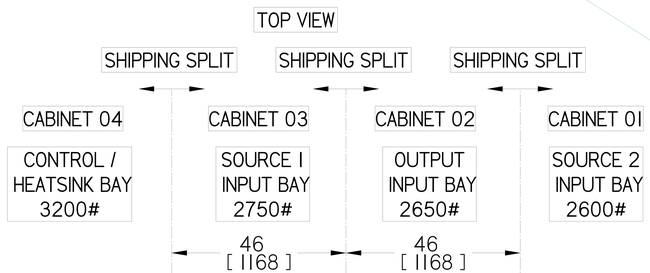

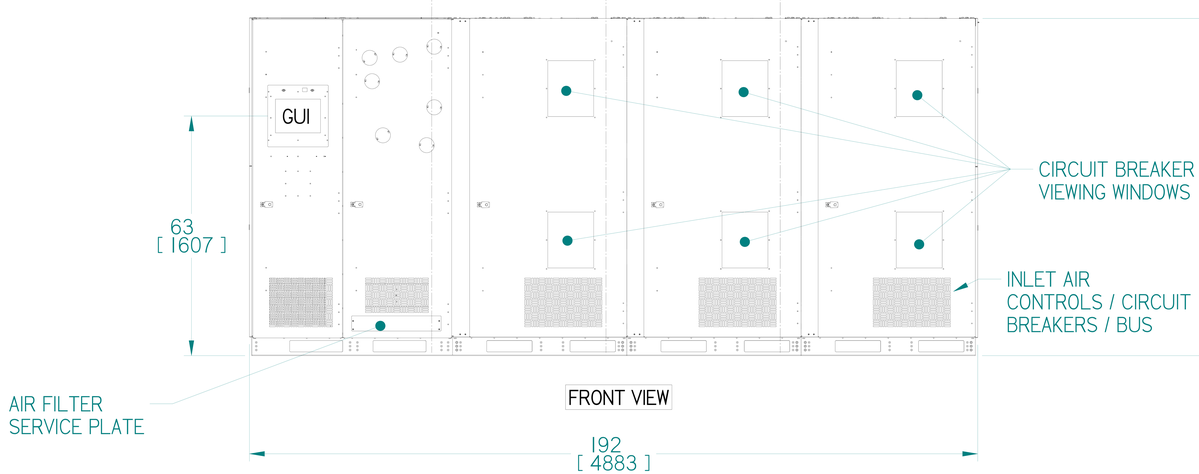

FRONT VIEW

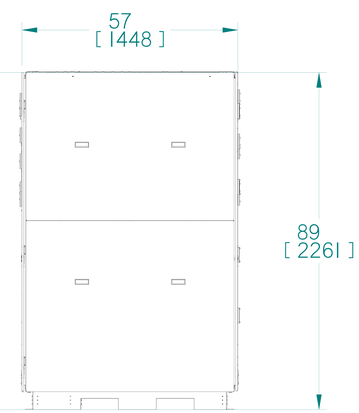

RIGHT SIDE VIEW

RECOMMENDED
MINIMUM
CLEARANCES:
FRONT: 42 IN. [1067]
REAR: 42 IN. [1067]
SIDES: 4 IN. [101]
TOP: 18IN. [457]

GROSS WEIGHT:
11,200# [5080kg]

WARNING: DO NOT COVER FORKLIFT SLOTS IN BASE AS THIS IS THE PATH FOR INCOMING HEATSINK CABINET COOLING AIR

Copyright © 2018, LayerZero Power Systems, Inc.

UNLESS OTHERWISE SPECIFIED
DIMENSIONS ARE IN INCHES
DIMENSIONS IN [ ] ARE IN MILLIMETERS
DO NOT SCALE DRAWING

TOLERANCES:
.XX ± .03
.XXX ± .010
ANGULAR ± .1/2

FIRST ANGLE PROJ.

OUTLINE, MOUNTING, INSTALLATION DIAGRAM
3000A, 277-480V, 3-Phase, 4-Wire, 60Hz, SMR,
2 Source
Series 70 eSTS

DWN	SPJ	DATE	01/17/22	SIZE D	FSCM NO.	DWG NO. 55-11-40895001	REV B
CHK	NEM	DATE	01/17/22				
APVD	SPJ	DATE	01/17/22	SCALE 1 = 4	94-MS-40895001SHT4	SHEET 4 OF 6	

REVISIONS				
ECN	REV	DESCRIPTION	DATE	APPROVED
N/A	B	GENERAL REVISION	10/07/2022	STEVE JANKO

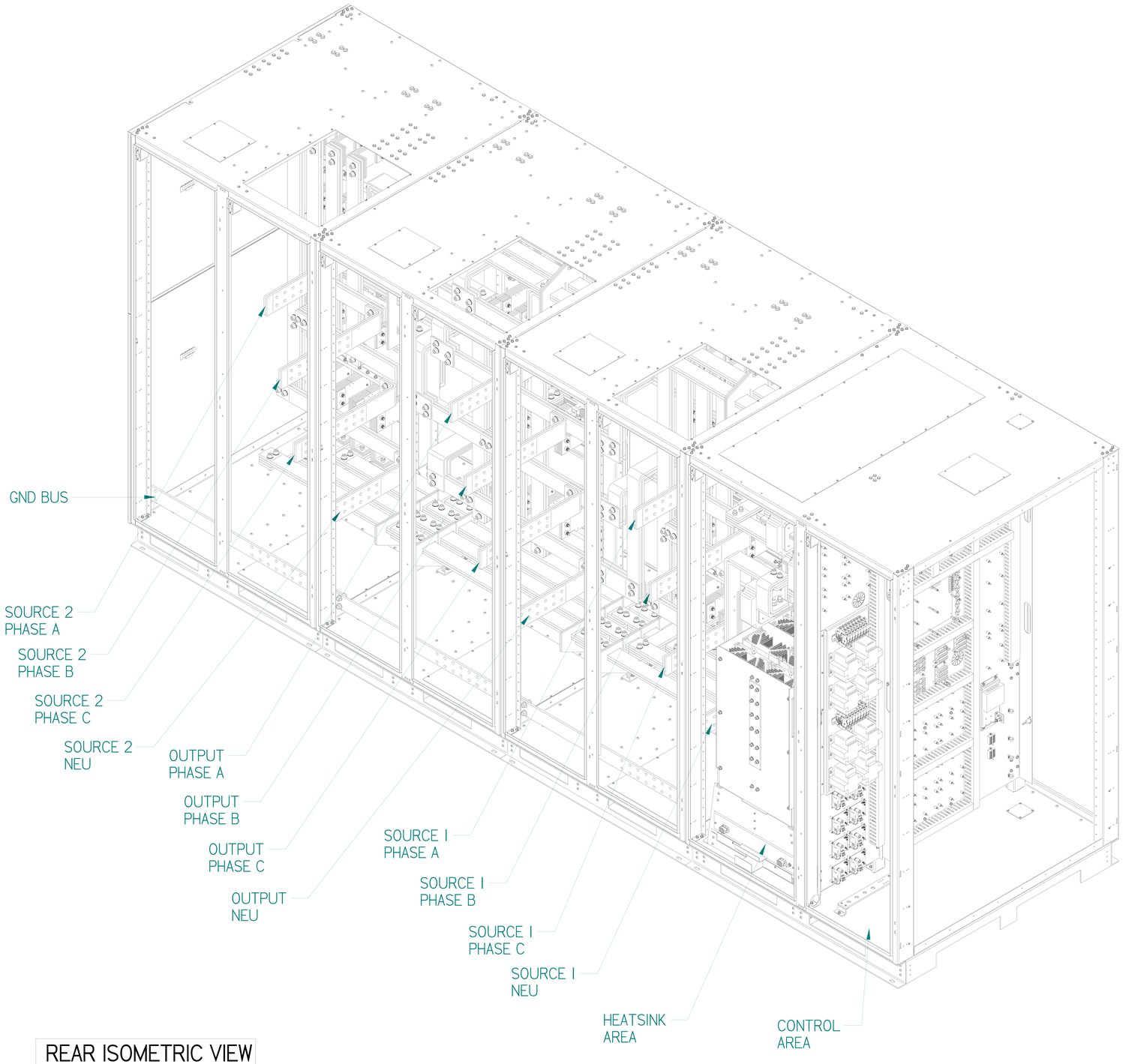

REAR ISOMETRIC VIEW
SCALE 2:1

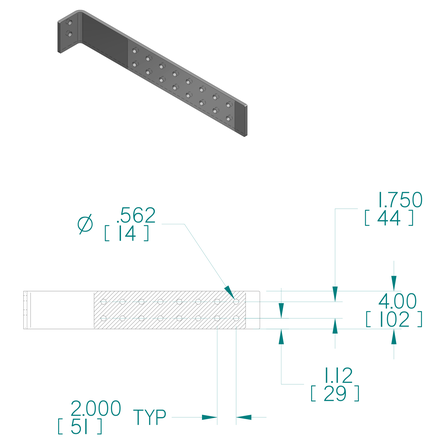

BUS CONNECTION ON SOURCE INPUTS AND OUTPUT PHASES AND NEUTRAL / FOR QTY 12 750MCM CABLE

Copyright © 2018, LayerZero Power Systems, Inc.

UNLESS OTHERWISE SPECIFIED
DIMENSIONS ARE IN INCHES
DIMENSIONS IN [ ] ARE IN MILLIMETERS
DO NOT SCALE DRAWING

TOLERANCES:
.XX ± .03
.XXX ± .010
ANGULAR ± .1/2

FIRST ANGLE PROJ.

OUTLINE, MOUNTING, INSTALLATION DIAGRAM
3000A, 277-480V, 3-Phase, 4-Wire, 60Hz, SMR,
2 Source
Series 70 eSTS

DWN	SPJ	DATE	01/17/22	SIZE D	FSCM NO.	DWG NO. 55-11-40895001	REV B
CHK	NEM	DATE	01/17/22				
APVD	SPJ	DATE	01/17/22	SCALE 1 = 4	94-MS-40895001SHT5	SHEET 5 OF 6	

REVISIONS				
ECN	REV	DESCRIPTION	DATE	APPROVED
N/A	B	GENERAL REVISION	10/07/2022	STEVE JANKO

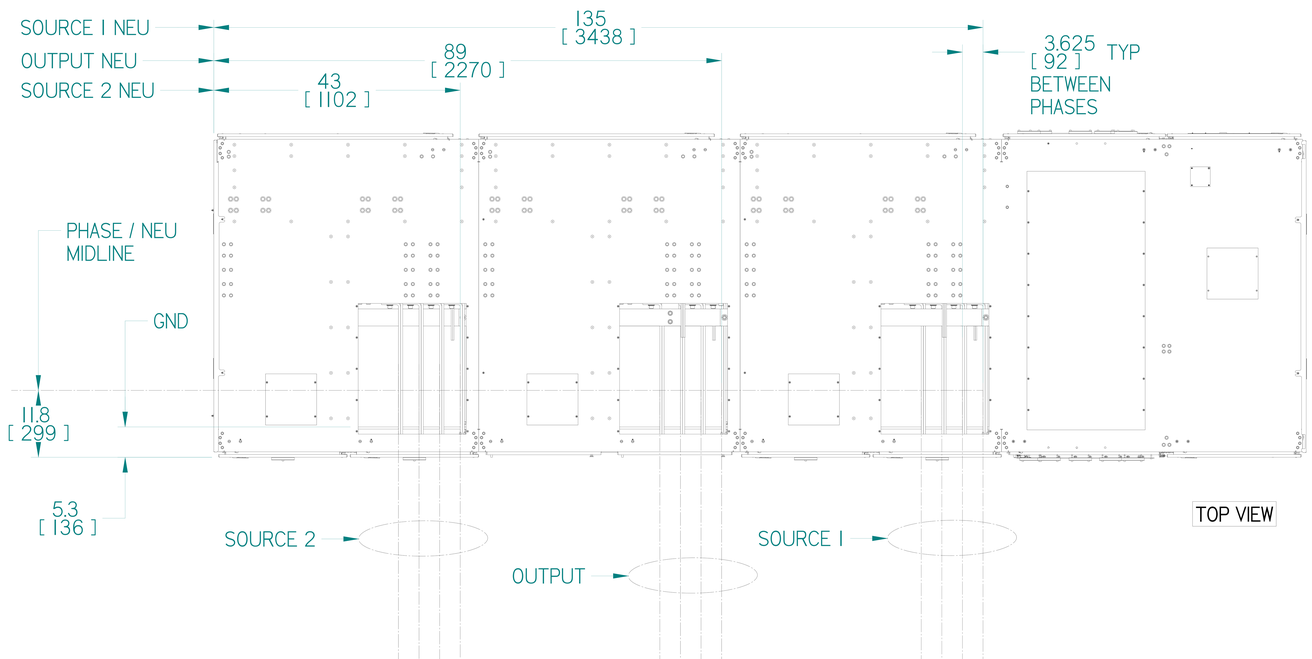

TOP VIEW

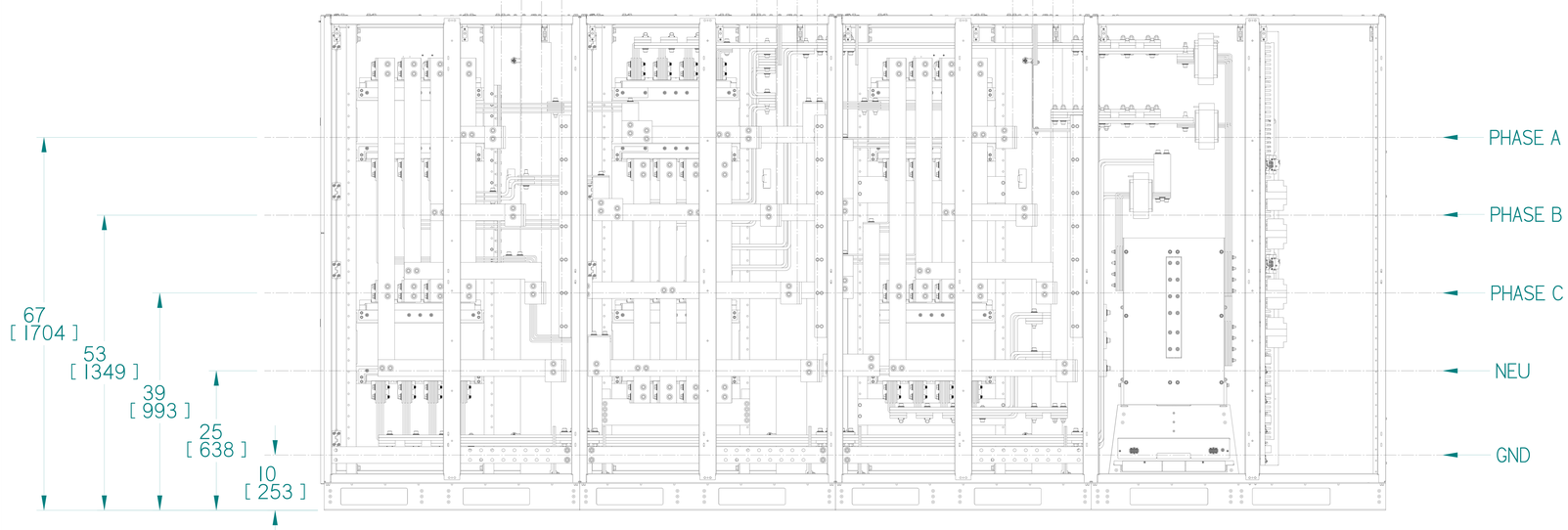

REAR VIEW

Copyright © 2018, LayerZero Power Systems, Inc.

UNLESS OTHERWISE SPECIFIED
DIMENSIONS ARE IN INCHES
DIMENSIONS IN [ ] ARE IN MILLIMETERS
DO NOT SCALE DRAWING

TOLERANCES:
.XX ± .03
.XXX ± .010
ANGULAR ± .1/2

FIRST ANGLE PROJ.

OUTLINE, MOUNTING, INSTALLATION DIAGRAM
3000A, 277-480V, 3-Phase, 4-Wire, 60Hz, SMR,
2 Source
Series 70 eSTS

DWN	SPJ	DATE	01/17/22	SIZE D	FSCM NO.	DWG NO. 55-11-40895001	REV B
CHK	NEM	DATE	01/17/22				
APVD	SPJ	DATE	01/17/22	SCALE 1 = 4	94-MS-40895001SHT6	SHEET 6 OF 6	